REVISIONS				
ZONE	REV	DESCRIPTION	DATE	APPROVED

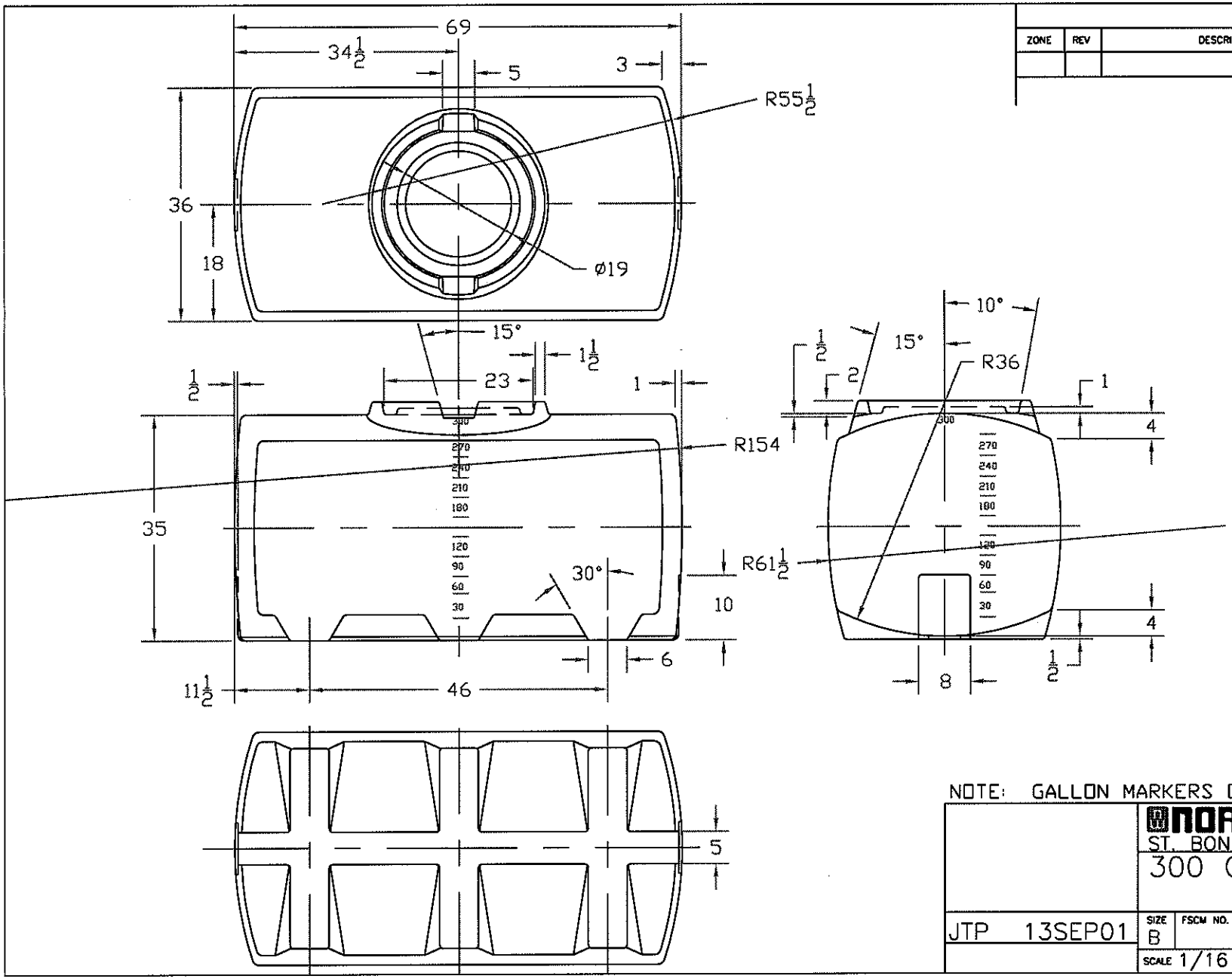

NOTE: GALLON MARKERS ONE END & ONE SIDE

NORWESCO
ST. BONIFACIUS, MN

300 GALLON PCO TANK

JTP 13SEP01	SIZE B	FSCM NO.	DWG NO.	REV
	SCALE 1/16		SHEET	